Melbye Raycore Taiwan Co., Ltd

# Specification of SFP BIDI LC 1.25G Transceiver

Part Number: ATRG-53xx-xxSDD-00

Eddy
2014/7/22

Raycore is a fiber optic product brand name of Melbye Skandinavia AS.

Melbye Raycore Taiwan Co., Ltd. Tel: +886 2 8226 7666, Fax: +886 2 8226 7666, E-mail: contact@raycore.com.tw
Postal address: 3F-5, No. 351, Sec. 2, Jhongshan Rd., Jhonghe Dist. New Taipei City, Taiwan, R.O.C.

For TX: 1310nm

For TX: 1550nm

For TX: 1490nm

## 1. Applications

- Gigabit Ethernet (1.25Gbps)
- Fiber Channel 1xFC (1.0625Gbps)
- Switch to Switch interface
- Switched backplane applications
- Router/Server interface
- Other optical transmission systems

## 2. Features

- Dual data-rate of 1.25Gbps/1.063Gbps operation
- Compliant with SFP MSA and SFF-8472 with simplex LC receptacle
- Compatible with RoHS
- +3.3V single power supply
- Operating case temperature: Standard: -5 to +70°C, Industry: -40 to +85°C

## 3. Description

The SFP transceivers are high performance, cost effective modules supporting dual data-rate of 1.25Gbps/1.0625Gbps and transmission with SMF.

The transceiver consists of three sections: a laser transmitter, a photodiode integrated and MCU control unit. All modules satisfy class I laser safety requirements.

The transceivers are compatible with SFP Multi-Source Agreement (MSA) and SFF-8472. For


This Specification is subject to change without notice. Please visit our website www.melbye.com.tw or www.raycore.com.tw for most update information and specification. Copyright © 2012 Melbye Raycore Taiwan Co., Ltd. All rights reserved.

further information, please refer to SFP MSA.

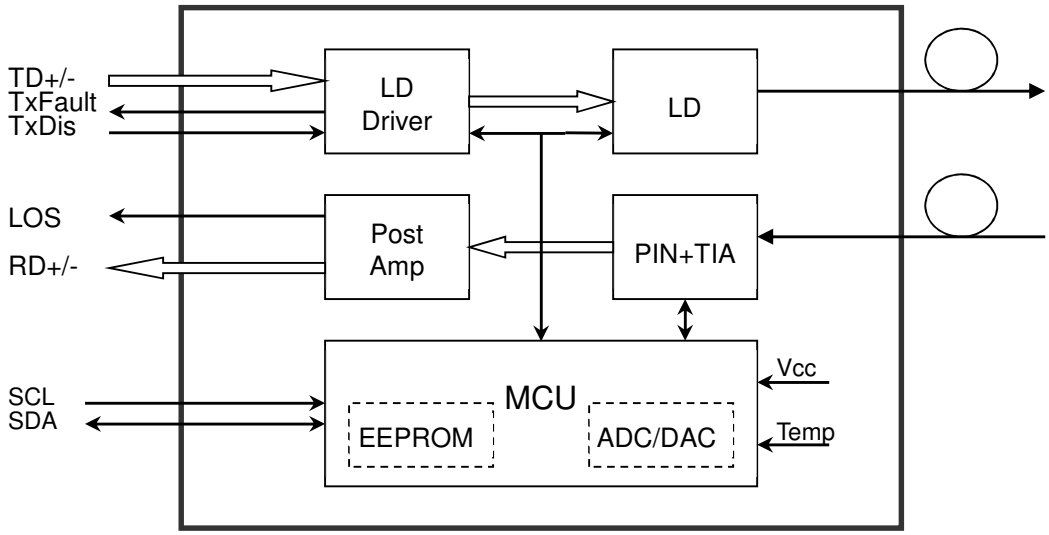


## 4. Absolute Maximum Ratings

| Parameter | Symbol | Min | Max | Unit |
|---|---|---|---|---|
| Supply Voltage | Vcc | -0.5 | 4.5 | V |
| Storage Temperature | Ts | -40 | +85 | °C |
| Operating Humidity | - | 5 | 85 | % |

## 5. Specifications

### Recommended Operating Conditions

| Parameter | | Symbol | Min | Typical | Max | Unit |
|---|---|---|---|---|---|---|
| Operating Case Temperature | Standard | Tc | -5 | | +70 | °C |
| | Industry | | -40 | | +85 | °C |
| Power Supply Voltage | | Vcc | 3.13 | 3.3 | 3.47 | V |
| Power Supply Current | | Icc | | | 300 | mA |
| Data Rate | Gigabit Ethernet | | | 1.25 | | Gbps |
| | Fiber Channel | | | 1.063 | | |

RAYCORE Raycore is the a fiber optic product brand name of Melbye Skandinavia AS. This Specification is subject to change without notice. Please visit our website www.melbye.com.tw or www.raycore.com.tw for most update information and specification. Copyright © 2012 Melbye Raycore Taiwan Co., Ltd. All rights reserved.

Raycore is the a fiber optic product brand name of Melbye Skandinavia AS. This Specification is subject to change without notice. Please visit our website www.melbye.com.tw or www.raycore.com.tw for most update information and specification. Copyright © 2012 Melbye Raycore Taiwan Co., Ltd. All rights reserved.

**Optical and Electrical Characteristics**

## ATRG-5335-MxSDD-00: (FP and PIN, TX: 1310nm/RX: 1550nm, 20km SMF Reach)

| Parameter | | Symbol | Min | Typical | Max | Unit | Notes |
|---|---|---|---|---|---|---|---|
| **Transmitter** | | | | | | | |
| Centre Wavelength | | λc | 1260 | 1310 | 1360 | nm | |
| Spectral Width (RMS) | | Δλ | | | 4 | nm | |
| Average Output Power | | Pout | -9 | | -3 | dBm | 1 |
| Extinction Ratio | | ER | 9 | | | dB | |
| Optical Rise/Fall Time (10%~90%) | | tr/tf | | | 0.26 | ns | |
| Data Input Swing Differential | | $V_{IN}$ | 400 | | 1800 | mV | 2 |
| Input Differential Impedance | | $Z_{IN}$ | 90 | 100 | 110 | Ω | |
| TX Disable | Disable | | 2.0 | | Vcc | V | |
| | Enable | | 0 | | 0.8 | V | |
| TX Fault | Fault | | 2.0 | | Vcc | V | |
| | Normal | | 0 | | 0.8 | V | |
| **Receiver** | | | | | | | |
| Centre Wavelength | | λc | 1480 | 1550 | 1580 | nm | |
| Receiver Sensitivity | | | | | -23 | dBm | 3 |
| Receiver Overload | | | -3 | | | dBm | 3 |
| Loss of Signal De-Assert | | $LOS_D$ | | | -23 | dBm | |
| Loss of Signal Assert | | $LOS_A$ | -35 | | | dBm | |
| Loss of Signal Hysteresis | | | 0.5 | | 4 | dB | |
| Data Output Swing Differential | | Vout | 400 | | 1800 | mV | 4 |
| Loss of Signal | | High | 2.0 | | Vcc | V | |
| | | Low | | | 0.8 | V | |

**Notes:**

1. The optical power is launched into SMF.
2. PECL input, internally AC-coupled and terminated.
3. Measured with a PRBS $2^7$-1 test pattern @1250Mbps, BER ≤$1\times10^{-12}$.

RAYCORE Raycore is the a fiber optic product brand name of Melbye Skandinavia AS. This Specification is subject to change without notice. Please visit our website www.melbye.com.tw or www.raycore.com.tw for most update information and specification. Copyright © 2012 Melbye Raycore Taiwan Co., Ltd. All rights reserved.

4. Internally AC-coupled.

Raycore is the a fiber optic product brand name of Melbye Skandinavia AS. This Specification is subject to change without notice. Please visit our website www.melbye.com.tw or www.raycore.com.tw for most update information and specification. Copyright © 2012 Melbye Raycore Taiwan Co., Ltd. All rights reserved.

## ATRG-5353-MxSDD-00: (DFB and PIN, TX: 1550nm/RX: 1310nm, 20km SMF Reach)

| Parameter | | Symbol | Min | Typical | Max | Unit | Notes |
|---|---|---|---|---|---|---|---|
| **Transmitter** | | | | | | | |
| Centre Wavelength | | λc | 1480 | 1550 | 1580 | nm | |
| Spectral Width (-20dB) | | Δλ | | | 1 | nm | |
| Side Mode Suppression Ratio | | SMSR | 30 | | | dB | |
| Average Output Power | | Pout | -9 | | -3 | dBm | 1 |
| Extinction Ratio | | ER | 9 | | | dB | |
| Optical Rise/Fall Time (10%~90%) | | tr/tf | | | 0.26 | ns | |
| Data Input Swing Differential | | $V_{IN}$ | 400 | | 1800 | mV | 2 |
| Input Differential Impedance | | $Z_{IN}$ | 90 | 100 | 110 | Ω | |
| TX Disable | Disable | | 2.0 | | Vcc | V | |
| | Enable | | 0 | | 0.8 | V | |
| TX Fault | Fault | | 2.0 | | Vcc | V | |
| | Normal | | 0 | | 0.8 | V | |
| **Receiver** | | | | | | | |
| Centre Wavelength | | λc | 1260 | 1310 | 1360 | nm | |
| Receiver Sensitivity | | | | | -23 | dBm | 3 |
| Receiver Overload | | | -3 | | | dBm | 3 |
| Loss of Signal De-Assert | | $LOS_D$ | | | -23 | dBm | |
| Loss of Signal Assert | | $LOS_A$ | -35 | | | dBm | |
| Loss of Signal Hysteresis | | | 0.5 | | 4 | dB | |
| Data Output Swing Differential | | Vout | 400 | | 1800 | mV | 4 |
| Loss of Signal | | High | 2.0 | | Vcc | V | |
| | | Low | | | 0.8 | V | |

**Notes:**

1. The optical power is launched into SMF.
2. PECL input, internally AC-coupled and terminated.
3. Measured with a PRBS $2^7$-1 test pattern @1250Mbps, BER ≤$1\times10^{-12}$.
4. Internally AC-coupled.

RAYCORE Raycore is the a fiber optic product brand name of Melbye Skandinavia AS. This Specification is subject to change without notice. Please visit our website www.melbye.com.tw or www.raycore.com.tw for most update information and specification. Copyright © 2012 Melbye Raycore Taiwan Co., Ltd. All rights reserved.

Raycore is the a fiber optic product brand name of Melbye Skandinavia AS. This Specification is subject to change without notice. Please visit our website www.melbye.com.tw or www.raycore.com.tw for most update information and specification. Copyright © 2012 Melbye Raycore Taiwan Co., Ltd. All rights reserved.

## ATRG-5335-DxSDD-00: (DFB and PIN, TX: 1310nm/RX: 1550nm, 40km SMF Reach)

| Parameter | | Symbol | Min | Typical | Max | Unit | Notes |
|---|---|---|---|---|---|---|---|
| **Transmitter** | | | | | | | |
| Centre Wavelength | | λc | 1260 | 1310 | 1360 | nm | |
| Spectral Width (-20dB) | | Δλ | | | 1 | nm | |
| Side Mode Suppression Ratio | | SMSR | 30 | | | dB | |
| Average Output Power | | Pout | -5 | | 0 | dBm | 1 |
| Extinction Ratio | | ER | 9 | | | dB | |
| Optical Rise/Fall Time (10%~90%) | | tr/tf | | | 0.26 | ns | |
| Data Input Swing Differential | | $V_{IN}$ | 400 | | 1800 | mV | 2 |
| Input Differential Impedance | | $Z_{IN}$ | 90 | 100 | 110 | Ω | |
| TX Disable | Disable | | 2.0 | | Vcc | V | |
| | Enable | | 0 | | 0.8 | V | |
| TX Fault | Fault | | 2.0 | | Vcc | V | |
| | Normal | | 0 | | 0.8 | V | |
| **Receiver** | | | | | | | |
| Centre Wavelength | | λc | 1480 | 1550 | 1580 | nm | |
| Receiver Sensitivity | | | | | -23 | dBm | 3 |
| Receiver Overload | | | -3 | | | dBm | 3 |
| Loss of Signal De-Assert | | $LOS_D$ | | | -23 | dBm | |
| Loss of Signal Assert | | $LOS_A$ | -35 | | | dBm | |
| Loss of Signal Hysteresis | | | 0.5 | | 4 | dB | |
| Data Output Swing Differential | | Vout | 400 | | 1800 | mV | 4 |
| Loss of Signal | | High | 2.0 | | Vcc | V | |
| | | Low | | | 0.8 | V | |

**Notes:**

1. The optical power is launched into SMF.
2. PECL input, internally AC-coupled and terminated.
3. Measured with a PRBS $2^7$-1 test pattern @1250Mbps, BER ≤$1\times10^{-12}$.
4. Internally AC-coupled.

RAYCORE Raycore is the a fiber optic product brand name of Melbye Skandinavia AS. This Specification is subject to change without notice. Please visit our website www.melbye.com.tw or www.raycore.com.tw for most update information and specification. Copyright © 2012 Melbye Raycore Taiwan Co., Ltd. All rights reserved.

Raycore is the a fiber optic product brand name of Melbye Skandinavia AS. This Specification is subject to change without notice. Please visit our website www.melbye.com.tw or www.raycore.com.tw for most update information and specification. Copyright © 2012 Melbye Raycore Taiwan Co., Ltd. All rights reserved.

## ATRG-5353-DxSDD-00: (DFB and PIN, TX: 1550nm/RX: 1310nm, 40km SMF Reach)

| Parameter | | Symbol | Min | Typical | Max | Unit | Notes |
|---|---|---|---|---|---|---|---|
| **Transmitter** | | | | | | | |
| Centre Wavelength | | λc | 1480 | 1550 | 1580 | nm | |
| Spectral Width (-20dB) | | Δλ | | | 1 | nm | |
| Side Mode Suppression Ratio | | SMSR | 30 | | | dB | |
| Average Output Power | | Pout | -5 | | 0 | dBm | 1 |
| Extinction Ratio | | ER | 9 | | | dB | |
| Optical Rise/Fall Time (10%~90%) | | tr/tf | | | 0.26 | ns | |
| Data Input Swing Differential | | $V_{IN}$ | 400 | | 1800 | mV | 2 |
| Input Differential Impedance | | $Z_{IN}$ | 90 | 100 | 110 | Ω | |
| TX Disable | Disable | | 2.0 | | Vcc | V | |
| | Enable | | 0 | | 0.8 | V | |
| TX Fault | Fault | | 2.0 | | Vcc | V | |
| | Normal | | 0 | | 0.8 | V | |
| **Receiver** | | | | | | | |
| Centre Wavelength | | λc | 1260 | 1310 | 1360 | nm | |
| Receiver Sensitivity | | | | | -23 | dBm | 3 |
| Receiver Overload | | | -3 | | | dBm | 3 |
| Loss of Signal De-Assert | | $LOS_D$ | | | -23 | dBm | |
| Loss of Signal Assert | | $LOS_A$ | -35 | | | dBm | |
| Loss of Signal Hysteresis | | | 0.5 | | 4 | dB | |
| Data Output Swing Differential | | Vout | 400 | | 1800 | mV | 4 |
| Loss of Signal | | High | 2.0 | | Vcc | V | |
| | | Low | | | 0.8 | V | |

**Notes:**

1. The optical power is launched into SMF.
2. PECL input, internally AC-coupled and terminated.
3. Measured with a PRBS $2^7$-1 test pattern @1250Mbps, BER ≤$1\times10^{-12}$.
4. Internally AC-coupled.

RAYCORE Raycore is the a fiber optic product brand name of Melbye Skandinavia AS. This Specification is subject to change without notice. Please visit our website www.melbye.com.tw or www.raycore.com.tw for most update information and specification. Copyright © 2012 Melbye Raycore Taiwan Co., Ltd. All rights reserved.

Raycore is the a fiber optic product brand name of Melbye Skandinavia AS. This Specification is subject to change without notice. Please visit our website www.melbye.com.tw or www.raycore.com.tw for most update information and specification. Copyright © 2012 Melbye Raycore Taiwan Co., Ltd. All rights reserved.

## ATRG-5345-ZxSDD-00: (DFB and PIN, TX: 1490nm/RX: 1550nm, 80km SMF Reach)

| Parameter | | Symbol | Min | Typical | Max | Unit | Notes |
|---|---|---|---|---|---|---|---|
| **Transmitter** | | | | | | | |
| Centre Wavelength | | λc | 1470 | 1490 | 1510 | nm | |
| Spectral Width (-20dB) | | Δλ | | | 1 | nm | |
| Side Mode Suppression Ratio | | SMSR | 30 | | | dB | |
| Average Output Power | | Pout | -2 | | 3 | dBm | 1 |
| Extinction Ratio | | ER | 9 | | | dB | |
| Optical Rise/Fall Time (10%~90%) | | tr/tf | | | 0.26 | ns | |
| Data Input Swing Differential | | $V_{IN}$ | 400 | | 1800 | mV | 2 |
| Input Differential Impedance | | $Z_{IN}$ | 90 | 100 | 110 | Ω | |
| TX Disable | Disable | | 2.0 | | Vcc | V | |
| | Enable | | 0 | | 0.8 | V | |
| TX Fault | Fault | | 2.0 | | Vcc | V | |
| | Normal | | 0 | | 0.8 | V | |
| **Receiver** | | | | | | | |
| Centre Wavelength | | λc | 1530 | 1550 | 1570 | nm | |
| Receiver Sensitivity | | | | | -25 | dBm | 3 |
| Receiver Overload | | | -3 | | | dBm | 3 |
| Loss of Signal De-Assert | | $LOS_D$ | | | -25 | dBm | |
| Loss of Signal Assert | | $LOS_A$ | -35 | | | dBm | |
| Loss of Signal Hysteresis | | | 0.5 | | 4 | dB | |
| Data Output Swing Differential | | Vout | 400 | | 1800 | mV | 4 |
| Loss of Signal | | High | 2.0 | | Vcc | V | |
| | | Low | | | 0.8 | V | |

**Notes:**

1. The optical power is launched into SMF.
2. PECL input, internally AC-coupled and terminated.
3. Measured with a PRBS $2^7$-1 test pattern @1250Mbps, BER ≤$1\times10^{-12}$.
4. Internally AC-coupled.

RAYCORE Raycore is the a fiber optic product brand name of Melbye Skandinavia AS. This Specification is subject to change without notice. Please visit our website www.melbye.com.tw or www.raycore.com.tw for most update information and specification. Copyright © 2012 Melbye Raycore Taiwan Co., Ltd. All rights reserved.

Raycore is the a fiber optic product brand name of Melbye Skandinavia AS. This Specification is subject to change without notice. Please visit our website www.melbye.com.tw or www.raycore.com.tw for most update information and specification. Copyright © 2012 Melbye Raycore Taiwan Co., Ltd. All rights reserved.

## ATRG-5354-ZxSDD-00: (DFB and PIN, TX: 1550nm/RX: 1490nm, 80km SMF Reach)

| Parameter | | Symbol | Min | Typical | Max | Unit | Notes |
|---|---|---|---|---|---|---|---|
| **Transmitter** | | | | | | | |
| Centre Wavelength | | λc | 1530 | 1550 | 1570 | nm | |
| Spectral Width (-20dB) | | Δλ | | | 1 | nm | |
| Side Mode Suppression Ratio | | SMSR | 30 | | | dB | |
| Average Output Power | | Pout | -2 | | 3 | dBm | 1 |
| Extinction Ratio | | ER | 9 | | | dB | |
| Optical Rise/Fall Time (10%~90%) | | tr/tf | | | 0.26 | ns | |
| Data Input Swing Differential | | $V_{IN}$ | 400 | | 1800 | mV | 2 |
| Input Differential Impedance | | $Z_{IN}$ | 90 | 100 | 110 | Ω | |
| TX Disable | Disable | | 2.0 | | Vcc | V | |
| | Enable | | 0 | | 0.8 | V | |
| TX Fault | Fault | | 2.0 | | Vcc | V | |
| | Normal | | 0 | | 0.8 | V | |
| **Receiver** | | | | | | | |
| Centre Wavelength | | λc | 1470 | 1490 | 1510 | nm | |
| Receiver Sensitivity | | | | | -25 | dBm | 3 |
| Receiver Overload | | | -3 | | | dBm | 3 |
| Loss of Signal De-Assert | | $LOS_D$ | | | -25 | dBm | |
| Loss of Signal Assert | | $LOS_A$ | -35 | | | dBm | |
| Loss of Signal Hysteresis | | | 0.5 | | 4 | dB | |
| Data Output Swing Differential | | Vout | 400 | | 1800 | mV | 4 |
| Loss of Signal | | High | 2.0 | | Vcc | V | |
| | | Low | | | 0.8 | V | |

**Notes:**

1. The optical power is launched into SMF.
2. PECL input, internally AC-coupled and terminated.
3. Measured with a PRBS $2^7$-1 test pattern @1250Mbps, BER ≤$1\times10^{-12}$.
4. Internally AC-coupled.

RAYCORE Raycore is the a fiber optic product brand name of Melbye Skandinavia AS. This Specification is subject to change without notice. Please visit our website www.melbye.com.tw or www.raycore.com.tw for most update information and specification. Copyright © 2012 Melbye Raycore Taiwan Co., Ltd. All rights reserved.

Raycore is the a fiber optic product brand name of Melbye Skandinavia AS. This Specification is subject to change without notice. Please visit our website www.melbye.com.tw or www.raycore.com.tw for most update information and specification. Copyright © 2012 Melbye Raycore Taiwan Co., Ltd. All rights reserved.

**Timing and Electrical**

| Parameter | Symbol | Min | Typical | Max | Unit |
|---|---|---|---|---|---|
| TX Disable Negate Time | t_on | | | 1 | ms |
| TX Disable Assert Time | t_off | | | 10 | µs |
| Time To Initialize, including Reset of TX Fault | t_init | | | 300 | ms |
| TX Fault Assert Time | t_fault | | | 100 | µs |
| TX Disable To Reset | t_reset | 10 | | | µs |
| Loss of Signal Assert Time | t_loss_on | | | 100 | µs |
| Loss of Signal De-assert Time | t_loss_off | | | 100 | µs |
| Serial ID Clock Rate | f_serial_clock | | | 400 | KHz |
| MOD_DEF (0:2)-High | $V_H$ | 2 | | Vcc | V |
| MOD_DEF (0:2)-Low | $V_L$ | | | 0.8 | V |

**Diagnostics**

| Parameter | Range | Unit | Accuracy | Calibration |
|---|---|---|---|---|
| Temperature | -5 to +70 | °C | ±3°C | Internal/External |
| | -40 to +85 | | | |
| Voltage | 3.0 to 3.6 | V | ±3% | Internal/External |
| Bias Current | 0 to 100 | mA | ±10% | Internal/External |
| TX Power | refer the spec. | dBm | ±3dB | Internal/External |
| RX Power | refer the spec. | dBm | ±3dB | Internal/External |

RAYCORE Raycore is the a fiber optic product brand name of Melbye Skandinavia AS. This Specification is subject to change without notice. Please visit our website www.melbye.com.tw or www.raycore.com.tw for most update information and specification. Copyright © 2012 Melbye Raycore Taiwan Co., Ltd. All rights reserved.

**Digital Diagnostic Memory Map**

The transceivers provide serial ID memory contents and diagnostic information about the present operating conditions by the 2-wire serial interface (SCL, SDA).

The diagnostic information with internal calibration or external calibration all are implemented, including received power monitoring, transmitted power monitoring, bias current monitoring, supply voltage monitoring and temperature monitoring.

The digital diagnostic memory map specific data field defines as following.

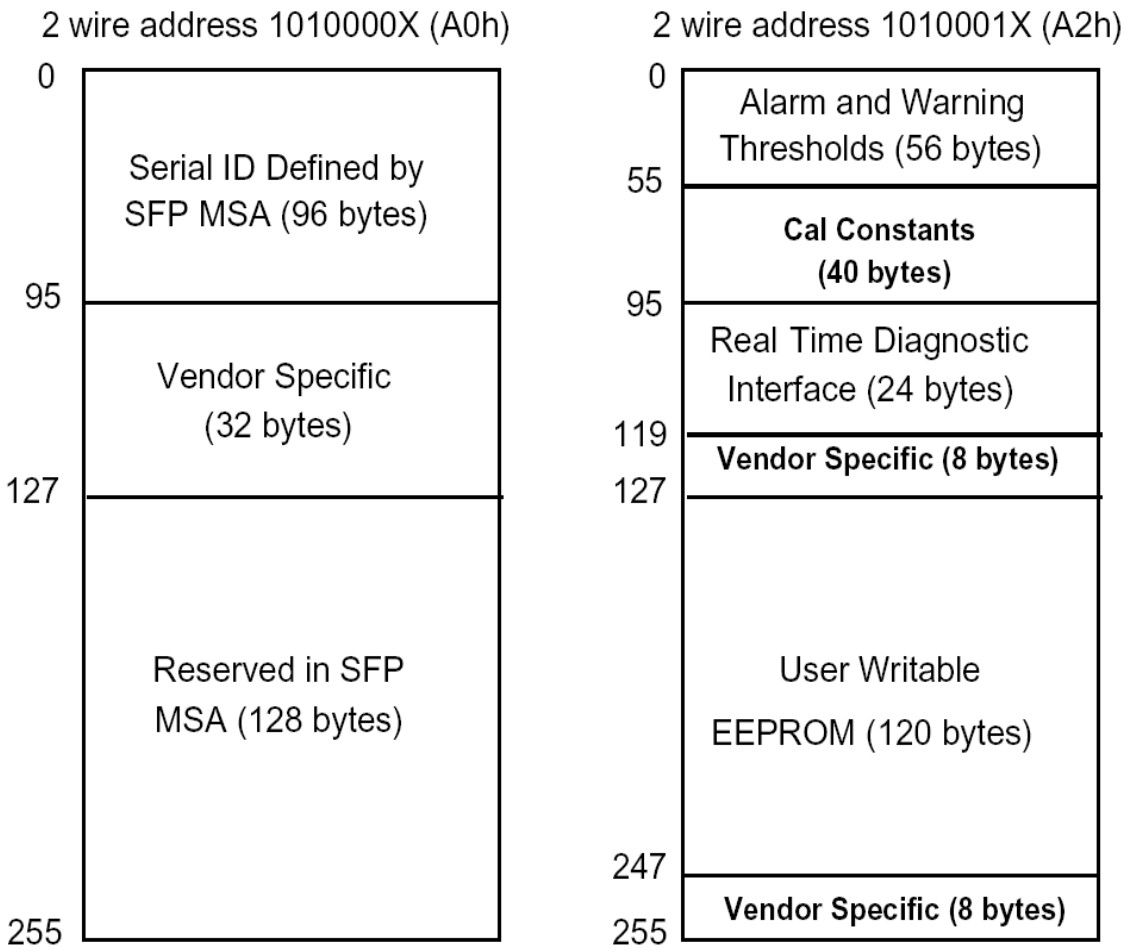


RAYCORE Raycore is the a fiber optic product brand name of Melbye Skandinavia AS. This Specification is subject to change without notice. Please visit our website www.melbye.com.tw or www.raycore.com.tw for most update information and specification. Copyright © 2012 Melbye Raycore Taiwan Co., Ltd. All rights reserved.

**Pin Definitions**

**Pin Diagram**

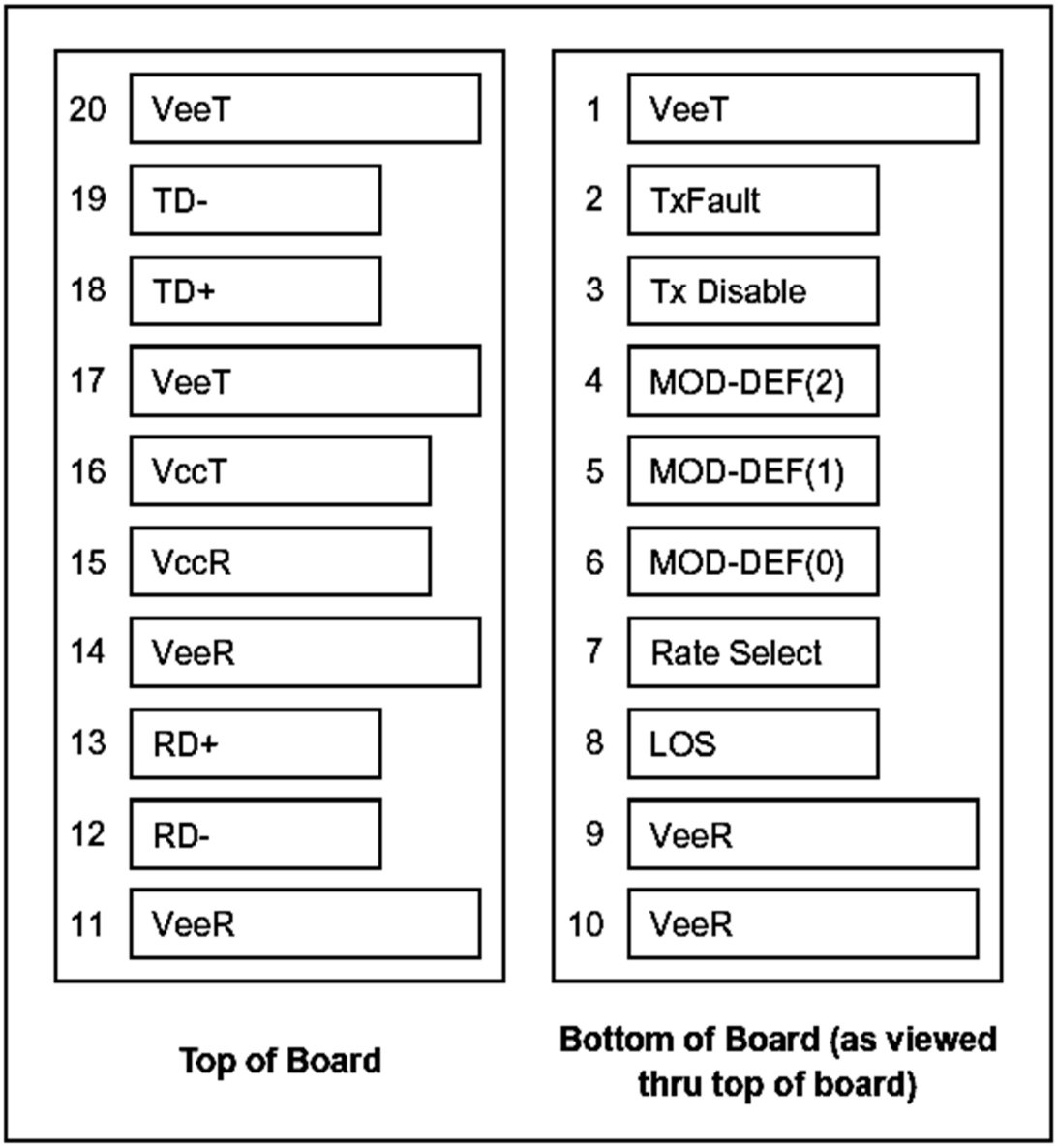


Raycore is the a fiber optic product brand name of Melbye Skandinavia AS. This Specification is subject to change without notice. Please visit our website www.melbye.com.tw or www.raycore.com.tw for most update information and specification. Copyright © 2012 Melbye Raycore Taiwan Co., Ltd. All rights reserved.

**Pin Descriptions**

| Pin | Signal Name | Description | Plug Seq. | Notes |
|---|---|---|---|---|
| 1 | $V_{EET}$ | Transmitter Ground | 1 | |
| 2 | TX FAULT | Transmitter Fault Indication | 3 | Note 1 |
| 3 | TX DISABLE | Transmitter Disable | 3 | Note 2 |
| 4 | MOD_DEF(2) | SDA Serial Data Signal | 3 | Note 3 |
| 5 | MOD_DEF(1) | SCL Serial Clock Signal | 3 | Note 3 |
| 6 | MOD_DEF(0) | TTL Low | 3 | Note 3 |
| 7 | Rate Select | Not Connected | 3 | |
| 8 | LOS | Loss of Signal | 3 | Note 4 |
| 9 | $V_{EER}$ | Receiver ground | 1 | |
| 10 | $V_{EER}$ | Receiver ground | 1 | |
| 11 | $V_{EER}$ | Receiver ground | 1 | |
| 12 | RD- | Inv. Received Data Out | 3 | Note 5 |
| 13 | RD+ | Received Data Out | 3 | Note 5 |
| 14 | $V_{EER}$ | Receiver ground | 1 | |
| 15 | $V_{CCR}$ | Receiver Power Supply | 2 | |
| 16 | $V_{CCT}$ | Transmitter Power Supply | 2 | |
| 17 | $V_{EET}$ | Transmitter Ground | 1 | |
| 18 | TD+ | Transmit Data In | 3 | Note 6 |
| 19 | TD- | Inv. Transmit Data In | 3 | Note 6 |
| 20 | $V_{EET}$ | Transmitter Ground | 1 | |

**Notes:**

Plug Seq.: Pin engagement sequence during hot plugging.

1. TX Fault is an open collector output, which should be pulled up with a 4.7k~10kohms resistor on the host board to a voltage between 2.0V and Vcc+0.3V. Logic 0 indicates normal operation; Logic 1 indicates a laser fault of some kind. In the low state, the output will be pulled to less than 0.8V.
2. TX Disable is an input that is used to shut down the transmitter optical output. It is pulled up within the module with a 4.7k~10kohms resistor. Its states are:
   Low (0 to 0.8V): Transmitter on
   (>0.8V, < 2.0V): Undefined
   High (2.0 to 3.465V): Transmitter Disabled
   Open: Transmitter Disabled
3. Mod-Def 0, 1, 2. These are the module definition pins. They should be pulled up with a 4.7k~10kohms resistor on the host board. The pull-up voltage shall be VccT or VccR.
   Mod-Def 0 is grounded by the module to indicate that the module is present
   Mod-Def 1 is the clock line of two wire serial interface for serial ID
   Mod-Def 2 is the data line of two wire serial interface for serial ID
4. LOS is an open collector output, which should be pulled up with a 4.7k~10kohms resistor. Pull up voltage between 2.0V and Vcc+0.3V. Logic 1 indicates loss of signal; Logic 0 indicates normal operation. In the low state, the output will be pulled to less than 0.8V.

RAYCORE Raycore is the a fiber optic product brand name of Melbye Skandinavia AS.
This Specification is subject to change without notice. Please visit our website www.melbye.com.tw or www.raycore.com.tw for most update information and specification. Copyright © 2012 Melbye Raycore Taiwan Co., Ltd. All rights reserved.

5. RD-/+: These are the differential receiver outputs. They are internally AC-coupled 100 differential lines which should be terminated with 100ohms (differential) at the user SERDES.
6. TD-/+: These are the differential transmitter inputs. They are internally AC-coupled, differential lines with 100ohms differential termination inside the module.

**Recommended Interface Circuit**

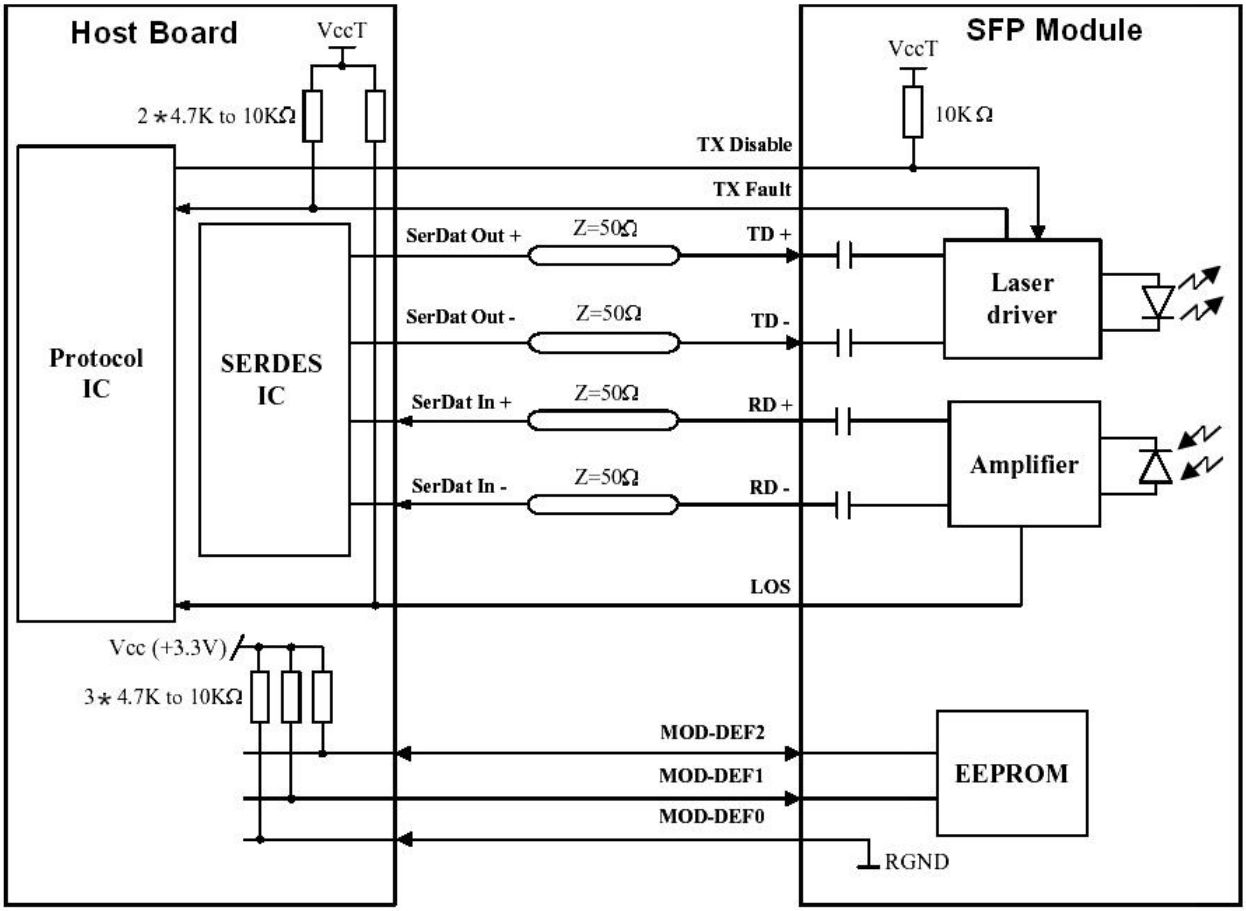


RAYCORE Raycore is the a fiber optic product brand name of Melbye Skandinavia AS. This Specification is subject to change without notice. Please visit our website www.melbye.com.tw or www.raycore.com.tw for most update information and specification. Copyright © 2012 Melbye Raycore Taiwan Co., Ltd. All rights reserved.

## 6. Ordering information

| Form Factor | Date Rate | Media | Distance | Wavelength | TX Power (dBm) | RX Sensitivity (dBm) | DDM (Y/N) | Temperature (°C) | Part Number |
|---|---|---|---|---|---|---|---|---|---|
| SFP-BIDI-LC | 1.25G | SMF | 20km | TX-1310nm RX-1550nm | -3 ~ -9 | ≤ -23 | Y | -5 ~ +70 | ATRG-5335-MBSDD-00 |
| SFP-BIDI-LC | 1.25G | SMF | 20km | TX-1310nm RX-1550nm | -3 ~ -9 | ≤ -23 | Y | -40 ~ +85 | ATRG-5335-MMSDD-00 |
| SFP-BIDI-LC | 1.25G | SMF | 20km | TX-1550nm RX-1310nm | -3 ~ -9 | ≤ -23 | Y | -5 ~ +70 | ATRG-5353-MBSDD-00 |
| SFP-BIDI-LC | 1.25G | SMF | 20km | TX-1550nm RX-1310nm | -3 ~ -9 | ≤ -23 | Y | -40 ~ +85 | ATRG-5353-MMSDD-00 |
| SFP-BIDI-LC | 1.25G | SMF | 40km | TX-1310nm RX-1550nm | 0 ~ -5 | ≤ -23 | Y | -5 ~ +70 | ATRG-5335-DBSDD-00 |
| SFP-BIDI-LC | 1.25G | SMF | 40km | TX-1310nm RX-1550nm | 0 ~ -5 | ≤ -23 | Y | -40 ~ +85 | ATRG-5335-DMSDD-00 |
| SFP-BIDI-LC | 1.25G | SMF | 40km | TX-1550nm RX-1310nm | 0 ~ -5 | ≤ -23 | Y | -5 ~ +70 | ATRG-5353-DBSDD-00 |
| SFP-BIDI-LC | 1.25G | SMF | 40km | TX-1550nm RX-1310nm | 0 ~ -5 | ≤ -23 | Y | -40 ~ +85 | ATRG-5353-DMSDD-00 |
| SFP-BIDI-LC | 1.25G | SMF | 80km | TX-1490nm RX-1550nm | 3 ~ -2 | ≤ -25 | Y | -5 ~ +70 | ATRG-5345-ZBSDD-00 |
| SFP-BIDI-LC | 1.25G | SMF | 80km | TX-1490nm RX-1550nm | 3 ~ -2 | ≤ -25 | Y | -40 ~ +85 | ATRG-5345-ZMSDD-00 |
| SFP-BIDI-LC | 1.25G | SMF | 80km | TX-1550nm RX-1490nm | 3 ~ -2 | ≤ -25 | Y | -5 ~ +70 | ATRG-5354-ZBSDD-00 |
| SFP-BIDI-LC | 1.25G | SMF | 80km | TX-1550nm RX-1490nm | 3 ~ -2 | ≤ -25 | Y | -40 ~ +85 | ATRG-5354-ZMSDD-00 |

Raycore is the a fiber optic product brand name of Melbye Skandinavia AS. This Specification is subject to change without notice. Please visit our website www.melbye.com.tw or www.raycore.com.tw for most update information and specification. Copyright © 2012 Melbye Raycore Taiwan Co., Ltd. All rights reserved.